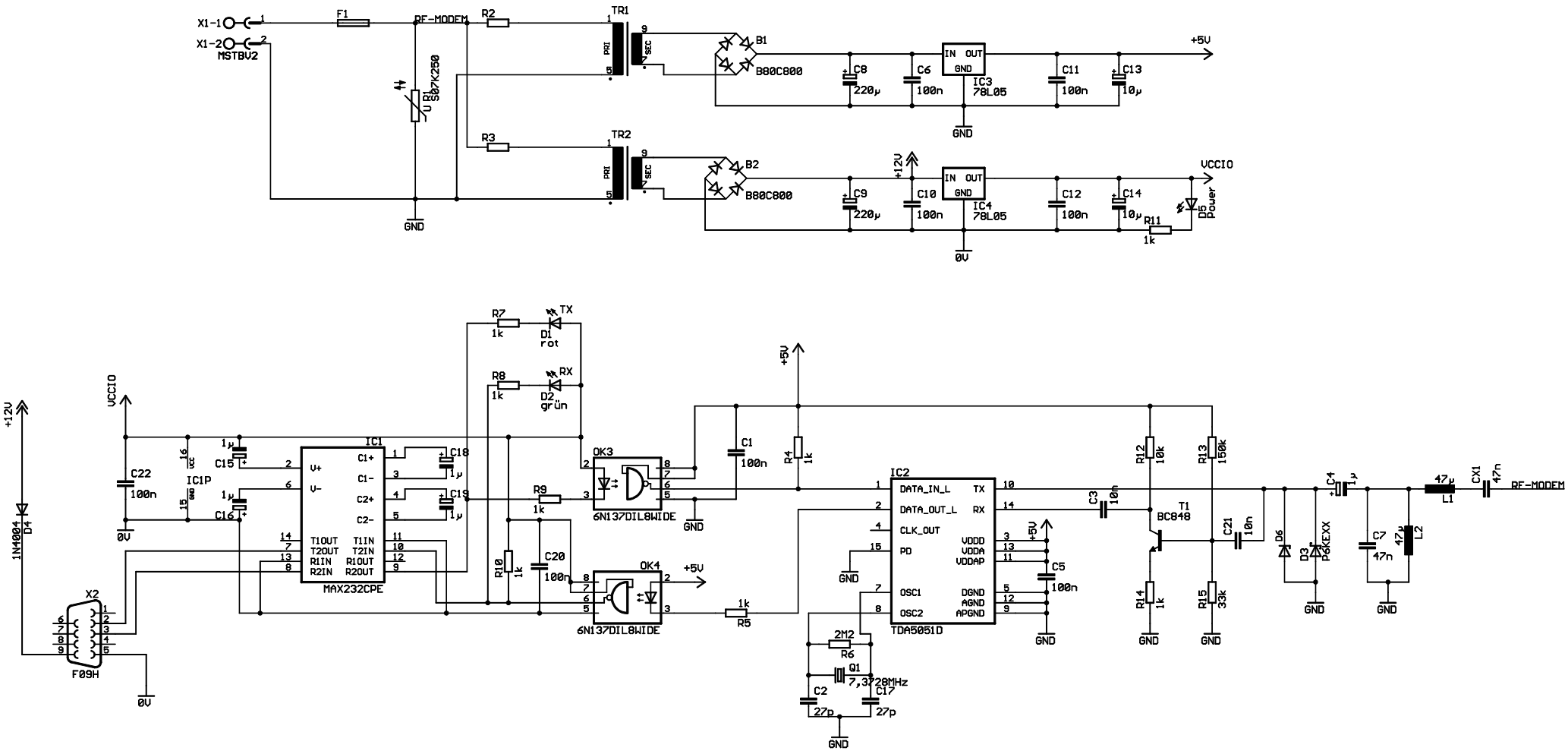

H4 MOUNT-PAD-ROUND5.5

H3 MOUNT-PAD-ROUND5.5

H2 MOUNT-PAD-ROUND5.5

H1 MOUNT-PAD-ROUND5.5

TITLE: rs232_pwl_test_new	
Document Number:	REV:
Date: 13.06.2002 18:36:22	Sheet: 1/1